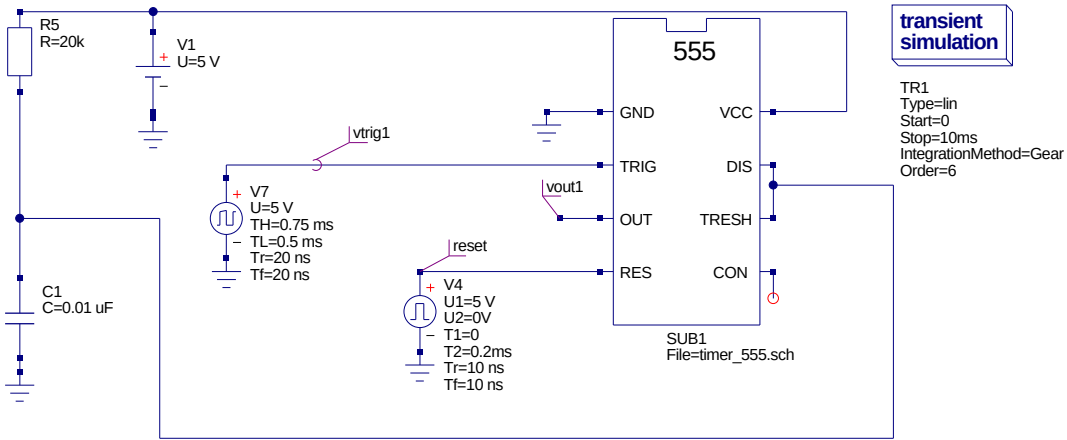
R5
R=20k
V1
U=5 V
555
GND
VCC
TRIG
DIS
OUT
TRESH
RES
CON
vtrig1
vout1
reset
V7
U=5 V
TH=0.75 ms
TL=0.5 ms
Tr=20 ns
Tf=20 ns
V4
U1=5 V
U2=0V
T1=0
T2=0.2ms
Tr=10 ns
Tf=10 ns
C1
C=0.01 uF
SUB1
File=timer_555.sch
transient simulation
TR1
Type=lin
Start=0
Stop=10ms
IntegrationMethod=Gear
Order=6