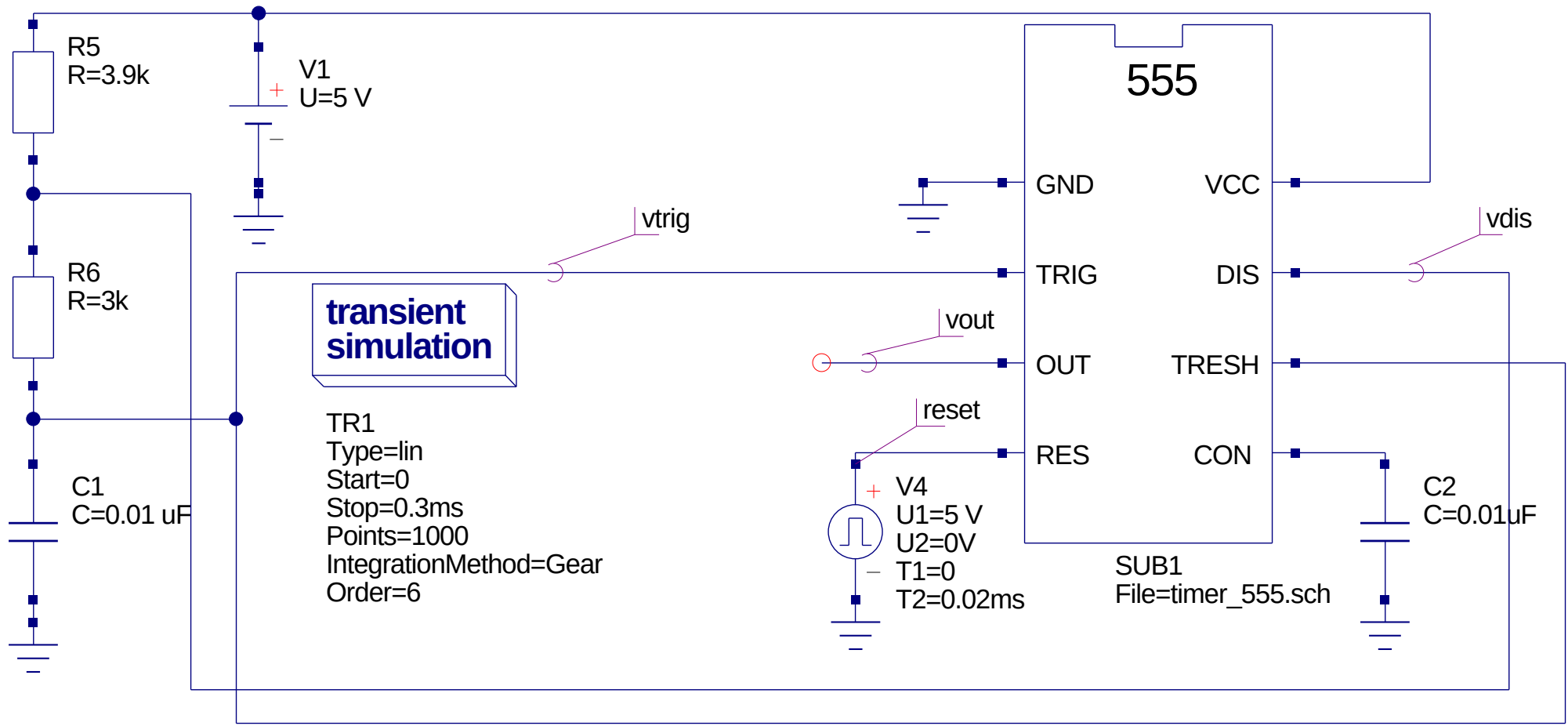
R5
R=3.9k
V1
U=5 V
555
GND
VCC
vtrig
vdis
R6
R=3k
TRIG
DIS
transient
simulation
vout
OUT
TRESH
reset
TR1
Type=lin
Start=0
Stop=0.3ms
Points=1000
IntegrationMethod=Gear
Order=6
RES
CON
C1
C=0.01 uF
V4
U1=5 V
U2=0V
T1=0
T2=0.02ms
C2
C=0.01uF
SUB1
File=timer_555.sch